REVISIONS

ECO	Description	Checked By	Date	Engineer	Date	Eff. Date
#00039	Product release					

Notes:

1. Material: 80g printing paper, white. A4 size.
2. Printing: Black
3. Pack and tie a label with part number 0-ML00-0004-01-1.

SUREN® Suren Systems Ltd.	ITEM NO 0-ML00-0004-01-1	REV 1
APPROVALS / DATE	MANUAL, DF-1015 , ENGLISH	
DWN Sally Chang 09-2-2007		
CHK		
ENGR	DRAWING NO N-ML00-0004-01-1	REV 1
IDENT CODE		
DO NOT SCALE DRAWING	SIZE A / SCALE 1:1 / SHEET 1 OF 3	

DF-1015 DFIR™ Motion Sensor

Operation and Specifications

SUREN

The DF-1015 is a high-grade professional motion sensor engineered with the world's best components and materials. Special Dual-Frequency Infrared (DFIR™) opto-electronics provide the highest level of false alarm immunity available in a passive infrared motion sensor. The principle of DFIR is simple: a moving object produces two signal frequencies; white light, electromagnetic interference, hot air, stationary changing-temperature objects (typical false alarm sources) produces only one signal frequency. Thus, by rejecting one-frequency signals, the DF-1015 rejects false alarms. The DF-1015 features two quad-element DFIR detection systems, one for long-range sensing and one for short-range sensing. The all-range upper system is SUREN's Split-View™ DFIR**, with a quad-element detector vertically dividing the usual (+) and (-) fields-of-view. The short-range lower system adds another complete detector and lens set, which works with the upper system to create SUREN's Super-View™ DFIR**.

SENSOR INITIALIZATION

Following power-on, a DF-1015 sensor is fully operational after a one-minute warm-up. During warm-up, its LED is ON. After warm-up, the sensor starts a ten-minute walk-test mode.

WALK TEST

Note: The DF-1015 should be tested once per year.

In Normal Operating Mode: Enable the LED (JP:1 ON). If the LED is not enabled, then, without removing power, set JP:1 to ON. Walk across the monitored area (within the sensor's optical fields-of-view). With sensitivity set at STANDARD, the LED should turn ON (for Alarm) after about three to five normal steps. With the sensitivity set at HIGH, the LED should turn ON (for Alarm) after about two to four normal steps. Each time the LED turns ON, wait for it to turn OFF. Then, wait 12 seconds before continuing the walk-test. When there is no motion in the monitored area, the LED should remain OFF.

In Special Modes: Cycle power-off/power-on, then Walk-test immediately after warm-up with one of the 10-minute walk-test modes.

10-MINUTE WALK-TEST MODES

Immediately after completion of warm-up, the sensor starts one of two types of ten-minute walk-test mode, according to the position of JP:2. (See 8 on page 2 for sensitivity setting.)

Flash Counting Mode: With the sensor sensitivity set at STANDARD, the sensor LED flashes*, until an Alarm occurs (upon the third flash for nominal signals; upon the second flash for strong signals). When an Alarm occurs, the LED stays ON for five seconds (while the Alarm relay is open).

View Finder Mode: With sensitivity set at HIGH, the sensor LED flashes* each time a person enters or leaves one of the sensor's optical fields-of-view (FOV). In this mode, the LED does not indicate Alarm state, though the Alarm works normally.

*The LED flash indicates an “event”- generally when a person enters or leaves one of the sensor fields-of-view.

After the end of the ten-minute walk-test mode, the LED operates as selected by the LED enable switch JP:1.

REMOTE LED ENABLE

The Remote LED Enable terminal functions exactly in parallel with JP:1, in a logical OR arrangement. Thus, if either JP:1 is ON or if the Remote LED Enable terminal is fed its LOW (active) voltage, then the LED is enabled.
The LOW (LED enabled) voltage range is 0-1.5 Vdc.
The HIGH (LED disabled) voltage range is 3.5-18 Vdc.

ALARM PROCESSING

DF-1015 alarm processing is designed for extreme false alarm rejection. This processing is a quantum leap above that of standard PIR motion sensors that simply count signal events. Both the Split-View™ DFIR** and the Super-View™ DFIR** detector/lens systems produce two infrared detector signals for evaluation by the DF-1015's microprocessor alarm processing system. The fields-of-view are set up so that moving objects produce two detector signals of different frequencies, while non-moving false alarm sources produce two detector signals of the same frequency.

SUPERVISION

1.DF-1015 supervision functions include these tests:
  a)Ambient temperature in-range;
  b)Detector electronics okay
  c)Supply voltage > 7.5 Vdc;
2. When a failure is detected, then:
  a)the LED blinks ON/OFF every second;
  b)Alarm relay will not re-close after an alarm signal event.
3. NOTE: The sensor will NOT initiate an alarm upon failure.

SPECIFICATIONS

Range: 15 meters in sensor-facing direction
20 meters at 45°angle from sensor-facing direction

Sensor Optical View Pattern (side view, in meters)

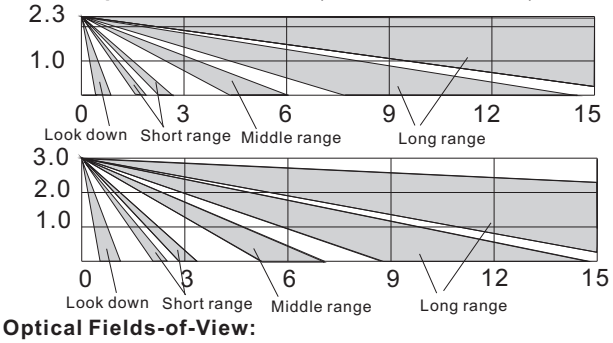

Optical Fields-of-View:

Long-range	Mid-range	Short-range	Look-down
88	30	18	8

Sensor Optical View Pattern (top view, in meters)

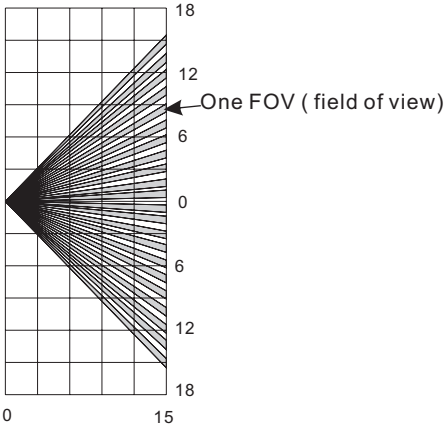

IR Sensor:
Upper: quad-element, Split-View™ DFIR**
Lower: dual-element

Power Supply:
8-16 Vdc; 15 mA at 12 Vdc

Alarm Relay:
Solid state, 60V, 150 mA, 1500 V_{rms} isolation

Tamper Switch:
Form A (NC). 50 mA at 30 Vdc

Housing Material:
ABS housing, HDPE lens

Dimensions:
112 x 60 x 50 mm (H x W x D)

Approvals/qualification:
CCC
CE

Events Detection:
SureSpot™ processing engine
DFIR™ false signal rejection

RF Immunity:
50 V/m 10-1000 MHz;
20 V/m 1-2 GHz

White Light Immunity:
25000 lux

Sensitivity:
Selectable: 2-event or 3-event

Operating Temperature Range:
-40°C to +55° C

Accessories:
Mounting bracket:
MB-101
MB-102 -With wall tamper

Note: Specifications are subject to change without notice.

Limitations of Security Products: Security products and alarm systems do not offer guaranteed protection against burglary, fire, or other emergencies. They may fail to warn for diverse reasons, including (but not limited to): power failure, dead batteries, improper installation, coverage “blind spots”, coverage areas overlooked during installation, defeat by technically sophisticated intruders, component failure, or inadequate maintenance. Alarm systems should be checked weekly to ensure that all devices are working properly. AN ALARM SYSTEM IS NOT A SUBSTITUTE FOR INSURANCE.

SUREN LIMITED WARRANTY

SUREN Systems, Ltd., of Fo Tan, Shatin, Hong Kong, warrants its products to be in conformance with its own plans and specifications and to be free from defects in materials and workmanship under normal use and service for twelve months from the date of original purchase. Seller's obligation shall be limited to repairing or replacing, at its option, free of charge for materials or labor, any part which is proved not in compliance with Seller's specifications or proves defective in materials or workmanship under normal use and service. Seller shall have no obligation under this Limited Warranty or otherwise if the product is altered or improperly repaired or serviced by anyone other than Seller. For warranty service, return transportation prepaid, to SUREN Systems, Ltd., Unit 15, 12/F, Block B, Wah Sang Industrial Building, 14-18 Wong Chuk Yeung Street, Fo Tan, Shatin, Hong Kong. Seller has no obligation to attend the buyer's location to retrieve the goods or make repairs on site.

There are no warranties, expressed or implied, of merchantability, or fitness for a particular purpose or otherwise, which extend beyond the description on the face hereof. In no case shall seller be liable to anyone for any consequential or incidental damages for breach of this or any other warranty, express or implied, or upon any other basis of liability whatsoever, even if the loss or damage is caused by its own negligence or fault.

Seller does not represent that the products it sells may not be compromised or circumvented; that the products will prevent any personal injury or property loss by burglary, robbery, fire or otherwise; or that the products will in all cases provide adequate warning or protection. Customer understands that a properly installed and maintained alarm system may only reduce the risk of a burglary, robbery, or fire without warning, but it is not insurance or a guarantee that such will not occur or that there will be no personal injury or property loss as a result.

Consequently, seller shall have no liability for any personal injury; property damage or other loss based on a claim the product failed to give any warning. However, if seller is held liable, whether directly or indirectly, for any loss or damage arising under this limited warranty or otherwise, regardless of cause or origin, seller's maximum liability shall not in any case exceed the purchase price of the product, which shall be the complete and exclusive remedy against seller.

This warranty replaces any previous warranties and is the only warranty made by Seller on this product. No increase or alteration, written or verbal, of the obligations of this Limited Warranty is authorized.

U.K. Patent No: GB2414551
Patents issued and pending worldwide.

©2005 SUREN Systems, Ltd.. All rights reserved. SUREN™, DFIR™, Split-View™, Super View™, PYROFLEX™ are trademarks of SUREN.

SUREN Part no.: N-ML00-0004-01-1

Printed in China

www.surensys.com

DF-1015 Installation Instructions

1: Mounting Location

A. Wall mounting:

1. Sensor base fastened flat on vertical wall (± 2 degrees)

B. Bracket mounting:

1. Bracket fastened to semi-vertical surface (± 15 degrees)
2. Sensor on bracket in vertical position (± 2 degrees)

C. All mounting:

1. Height = 2.3 m or 3m above floor of monitored area
2. Clear line-of-sight from sensor to monitored area
   Note: glass will block sensor's view.
3. Wall temperature similar to walls/floor of monitored area
4. Sensor aimed away from windows and reflected sunlight
5. Sensor aimed away from heaters or heater/cooler outlets
6. Sensor aimed so that likely intruder paths cross three views

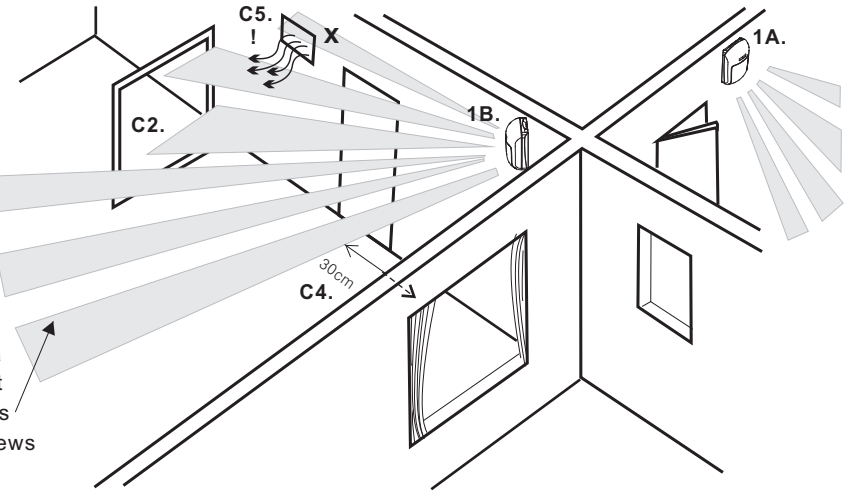

2: Sensor Disassembly

In slot at sensor bottom, use screwdriver or thumbnail to push inward (1.) on cover latch. (2.) Remove cover.(3.) Push outward on circuit board latch at sensor base right side. Using circuit board terminal block as handle,gently lift circuit board right side and remove.

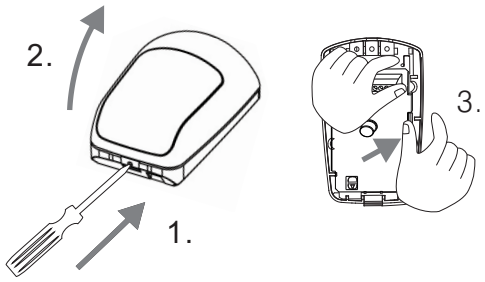

3: Base Hole Preparation

Identify necessary holes on diagram;

1. For wall mounting,knock out hole covers.
2. For corner or 45 degree wall mounting, use drill to open at least two holes at base side depressions.
3. For bracket mounting, use drill to open a 3 mm hole in the center of the square recess at the rear of the base. See 6 for more.

If cable ties will be added for wire strain relief, select holes needed, then clear out thin plastic material covering those holes.

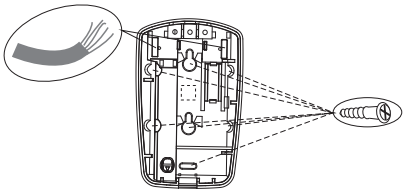

4: Cable Preparation

Remove 8 cm of cable jacket. Pass the cable wires through the selected hole. Lay cable in wire channel. Secure cable with cable tie.

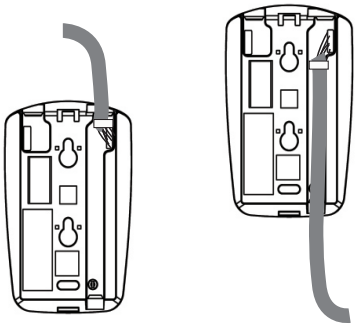

5: Wall Mounting

Use screws to mount on wall or in corner.

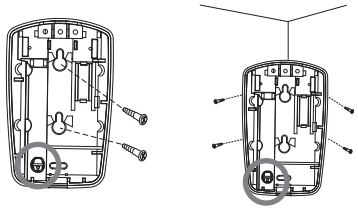

Set circuit board alignment post in position "0"or "1" to select mounting height.

Alignment Post position "0"
Use with:
Wide-angle lens.
Curtain lens

Alignment Post position "1"
Use with:
Wide-angle lens
Curtain lens

6: Bracket Mounting

Use screws to mount bracket in desired location. Use screw to mount sensor base onto bracket. Refer to 5 for setting circuit board alignment post.

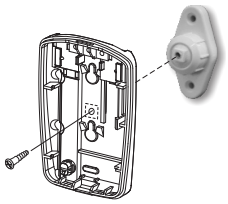

7: Circuit Board Installation

To replace circuit board, (1.) place circuit board left edge into two left-hand mounting slots in sensor base. (2.) On right-hand side, gently press circuit board into place until latch snaps over circuit board.Cut cable wires to appropriate length and connect wires to sensor terminal block.

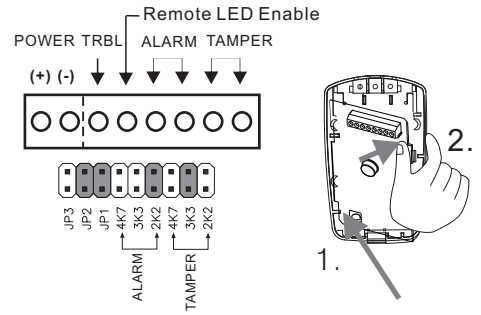

8: Operation Programming

Set JP:1 and JP:2 according to need. If there is a way for intruders to pass only a very short distance in the sensor's view, or if aggressive detection is required, then use high sensitivity. Otherwise, standard sensitivity is fine for ordinary applications. Factory-set JP positions are shown below in gray.
Dual-frequency event counts: High=2; Standard=3.

DF-1015			
FUNCTION	JP	ON	OFF
SENSITIVITY	2	STANDARD	HIGH
LED ENABLE	1	ENABLE	DISABLE

9: Motion Distance Sensitivity

With standard sensitivity, detection occurs in 3 to 5 steps. With high sensitivity, detection occurs in 2 to 4 steps.

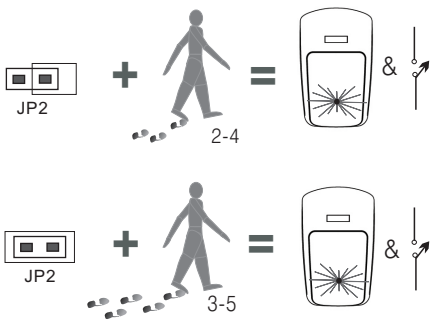

10: LED Indicator Operation

The chart below shows possible LED indications.

DF-1015	
Sensor State	LED Display
Warm-up	ON
Alarm	ON 5 Sesonds (IF LED ENABLED)
Failure	Flashing
Normal	OFF